1 -Comp. Loc.: Radio

- ⇒ “1.1 Radio Navigation System ”, page 1
- ⇒ “1.2 Multimedia System ”, page 2
- ⇒ “1.3 Telematics through MY 2003 ”, page 3
- ⇒ “1.4 Telematics from MY 2004 ”, page 4
- ⇒ “1.5 Speaker System ”, page 5
- ⇒ “1.6 Antenna ”, page 6

1.1 Radio Navigation System

Protected by copyright. Copying for private or commercial purposes, in part or in whole, is not permitted unless authorised by Volkswagen AG. Volkswagen AG does not guarantee or accept any liability with respect to the correctness of information in this document. Copyright by Volkswagen AG.

1 - Operating electronics/navigation system control module -J402- , with operating buttons and speaker

- ❑ In center console under radio

2 - Instrument cluster display

3 - Compass magnetic field sensor -G197-

- ❑ Under roof, at right near roof antenna

4 - Radio/telephone/navigation system antenna -R52-

5 - Navigation system with CD drive control module -J401-

- ❑ In luggage compartment behind left side trim

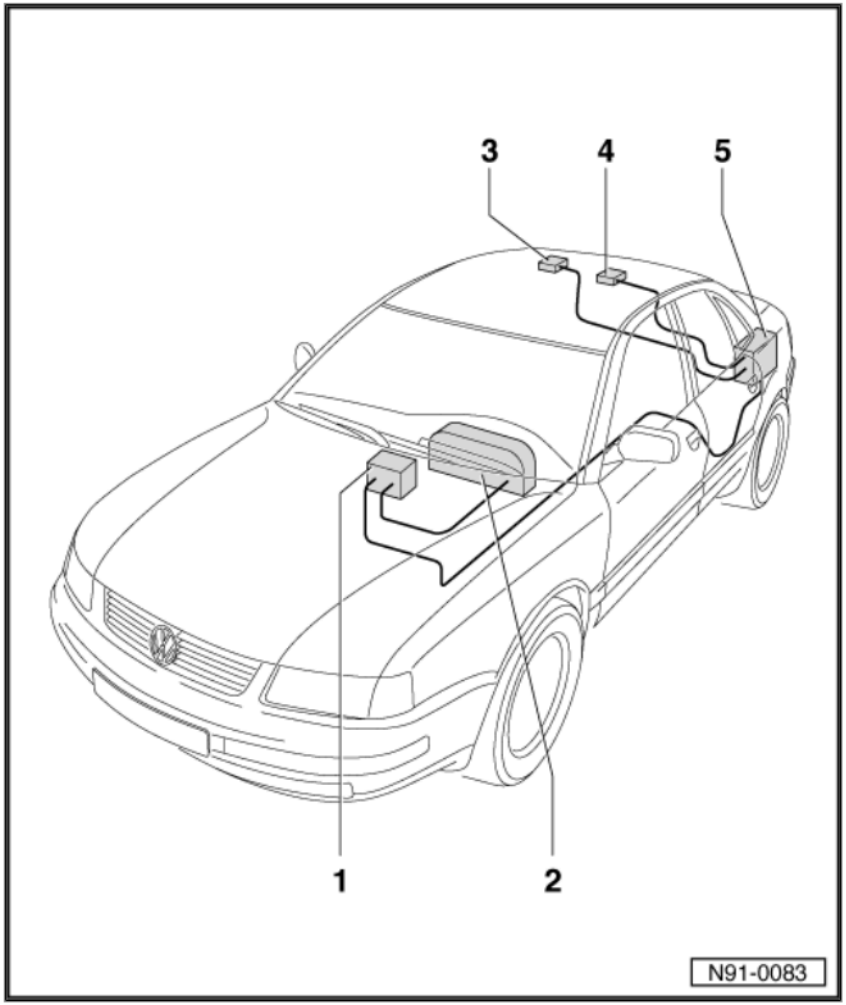

Protected by copyright. Copying for private or commercial purposes, in part or in whole, is not permitted unless authorised by Volkswagen AG. Volkswagen AG does not guarantee or accept any liability with respect to the correctness of information in this document. Copyright by Volkswagen AG.

1.2 Multimedia System

1 - Additional connector sockets
- ❑ Installed in multimedia system in roof console

2 - Video recorder/DVD player -R129-
- ❑ Installed in multimedia system in roof console

3 - Multimedia display unit 1 -Y22-
- ❑ Installed in multimedia system in roof console

4 - Right multimedia headphones -R124-

5 - Remote control

6 - Left multimedia headphones -R123-

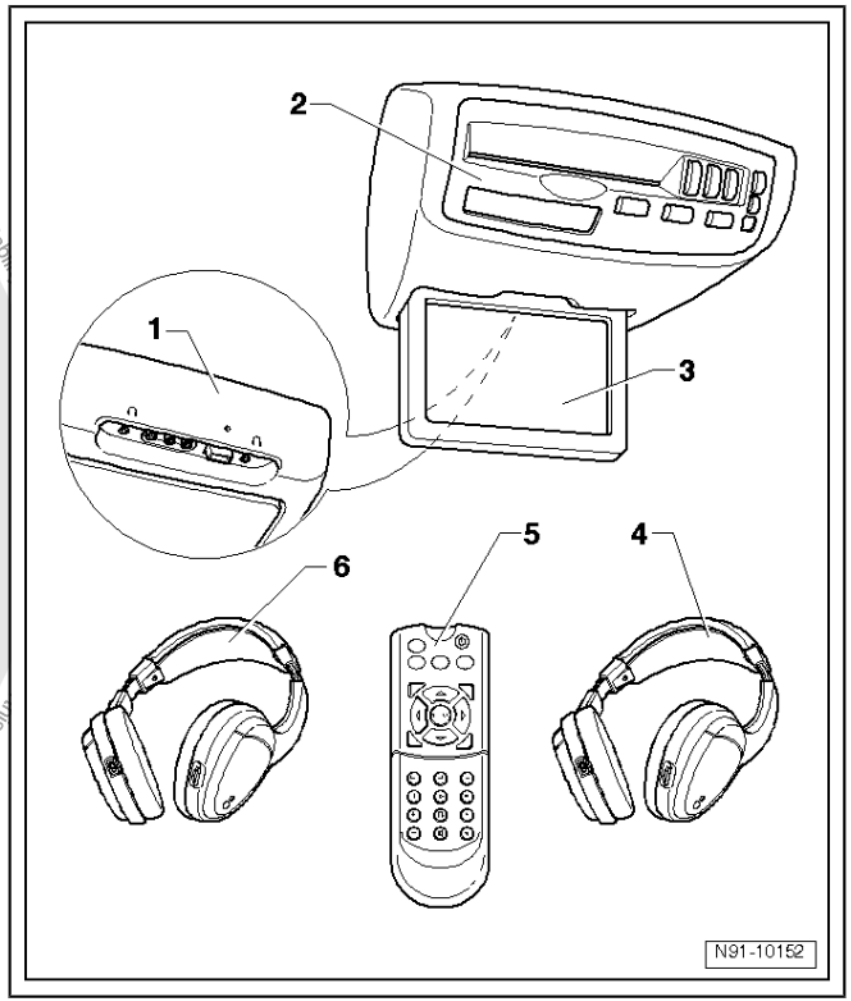

Protected by copyright. Copying for private or commercial purposes, in part or in whole, is not permitted unless authorised by Volkswagen AG. Volkswagen AG does not guarantee or accept any liability with respect to the contents of this document. Copyright by Volkswagen AG.

1.3 Telematics through MY 2003

1 - Cellular telephone -R54-

2 - Telematics control head -E264-

3 - Radio/telephone antenna -R51-

3 - GPS antenna -R50-

4 - Antenna splitter -R87-

- ❑ Is only installed on vehicles with Telematics system and also RNS system

5 - Telematics control module -J499-

- ❑ Installed in luggage compartment in wagon in right storage bin ⇒ Item 9 (page 5)
- ❑ Installed in luggage compartment in sedan in left storage compartment

6 - Instrument cluster with Navigation system display unit -J414-

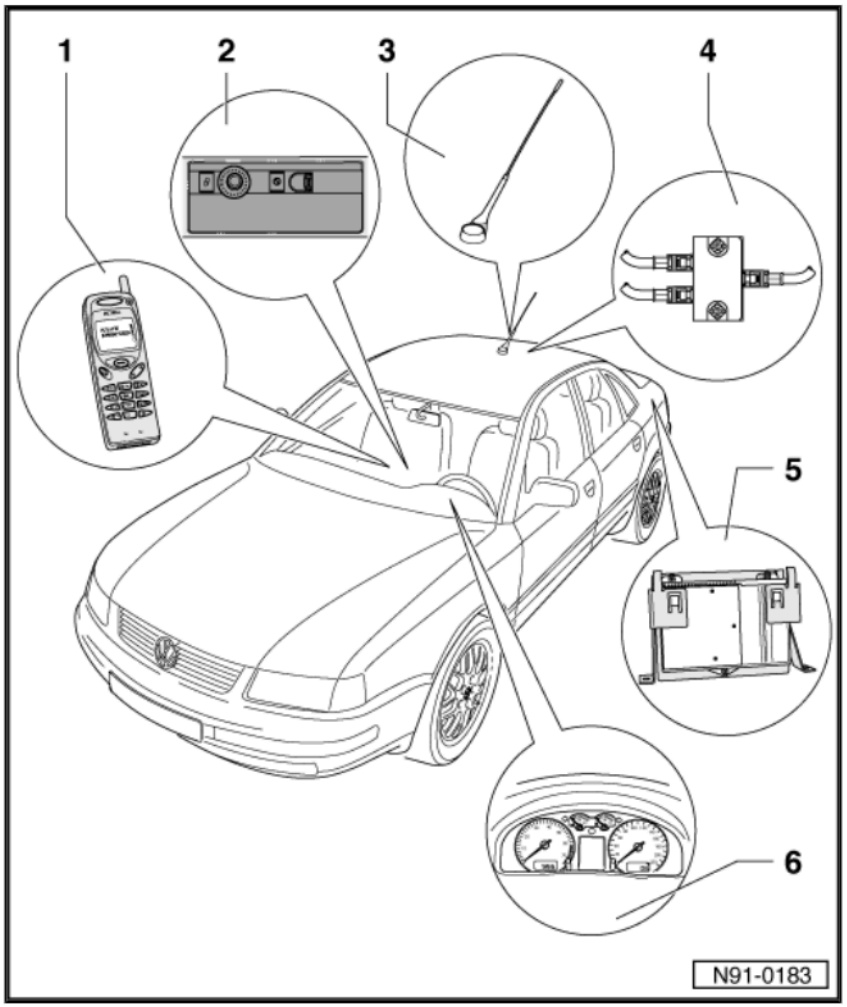

Protected by copyright. Copying for private or commercial purposes, in part or in whole, is not permitted unless authorised by Volkswagen AG. Volkswagen AG does not guarantee or accept any liability with respect to the correctness of information in this document. Copyright by Volkswagen AG.

1.4 Telematics from MY 2004

1 - Telephone antenna -R65-

1 - Radio/telephone antenna -R51-

1 - GPS antenna -R50-

5 - Telephone microphone -R38-

6 - Telematics control head -E264-

- ❑ Installed at front center under headliner

7 - Telematics indicator lamp -K186-

- ❑ Installed in Telematics Control Head

8 - Radio -R-

9 - Telematics control module -J499-

- ❑ Installed in luggage compartment in wagon in right storage bin
- ❑ Installed in luggage compartment in sedan in left storage compartment

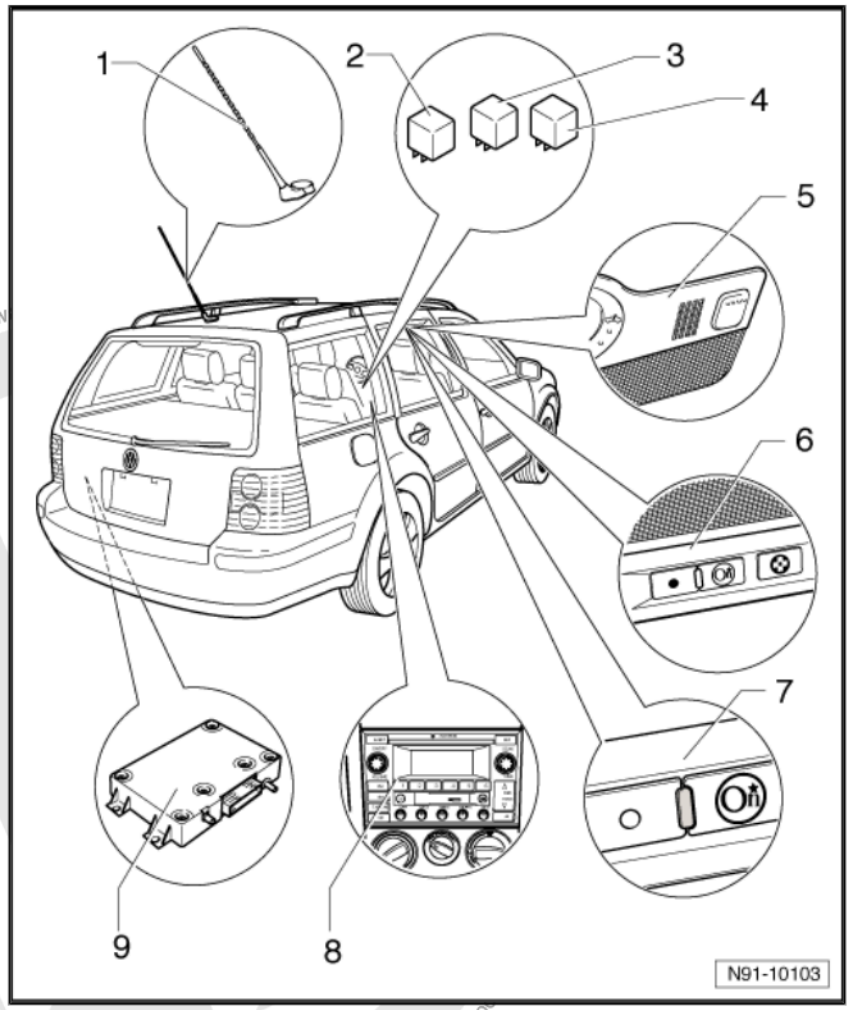

Protected by copyright. Copying for private or commercial purposes, in part or in whole, is not permitted unless authorised by Volksw
cumen. Copyright by Volkswagen AG.

1.5 Speaker System

1 - Right front treble speaker -R22-
1 - Left front treble speaker -R20-
2 - Right front bass speaker -R23-
2 - Left front bass speaker -R21-
3 - Right rear treble speaker -R16-
3 - Left rear treble speaker -R14-
4 - Right rear bass speaker -R17-
4 - Left rear bass speaker -R15-
5 - Radio -R-
5 - Radio/navigation display unit control module -J503-

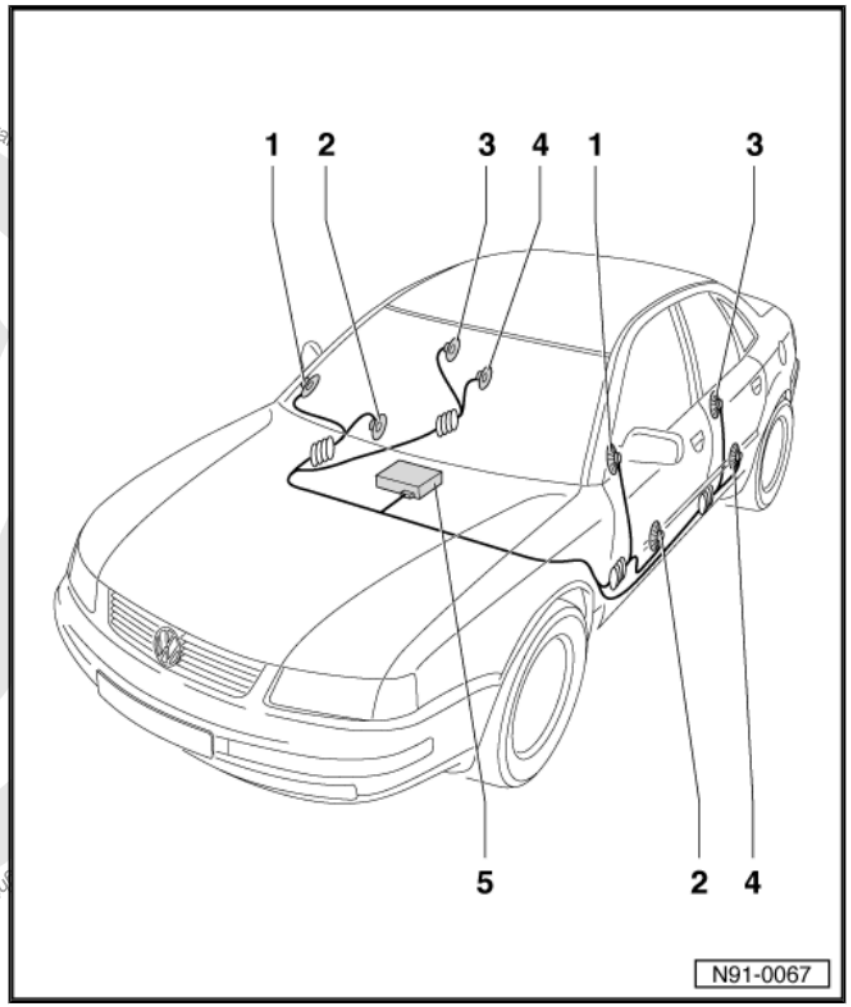

Protected by copyright. Copying for private or commercial purposes, in part or in whole, is not permitted unless authorised by Volkswagen AG. Volkswagen AG does not guarantee

1.6 Antenna

Protected by copyright. Copying for private or commercial purposes, in part or in whole, is not permitted unless authorised by Volkswagen AG. Volkswagen AG does not guarantee

1 - Radio and TV reception window antenna

2 - Antenna Amplifier

- In the wagon, four amplifiers are installed in the luggage compartment under the side windows, two on the left and two on the right
- In the sedan, four amplifiers are installed, two under the rear shelf and one each under left and right D-pillar trim

3 - Antenna selection control module -J515-

- In the wagon, it is installed in the left of the luggage compartment below the side window
- In the sedan, it is installed under the rear shelf

4 - Radio -R-

5 - Antenna input

6 - Intermediate frequency signal output

7 - Navigation/TV tuner -J415-
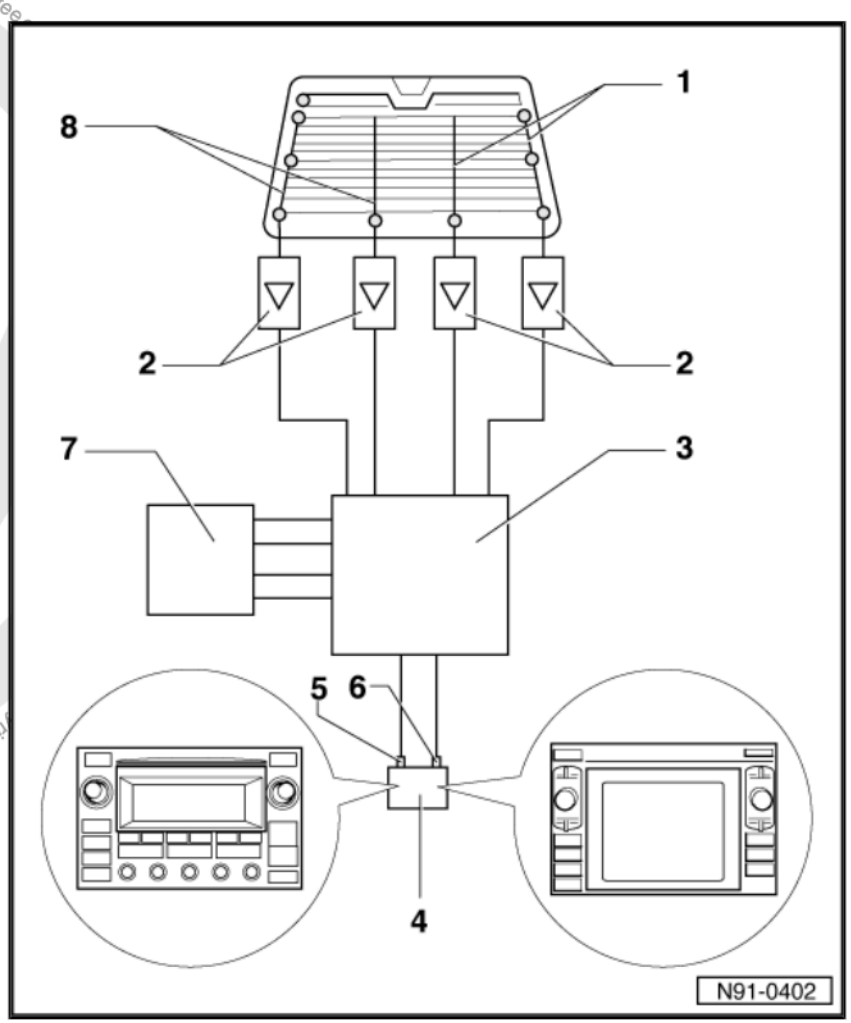
8 - Radio and TV reception window antenna